Speedofer Components Pvt. Ltd.

Technical Data Sheet RoHS Compliant Product

EE16/07/05, No Gap Cores, SFP4, MnZn

Customer Name & Address	
Date of Approval	
Name & Position Title of Approval Authority	
Stamp with Signature	

Product Specifications:

Parameter		Symbol	Unit	Value	Geometry Drawing Reference
Magnetic Characteristics	Effective Length	l_e	mm	35.1	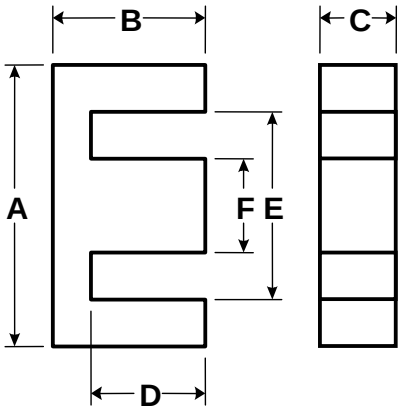
	Effective Area	A_e	mm^2	19.2	
	Effective Volume	V_e	mm^3	675.0	
Dimensions	A	-	mm	16.2 ± 0.40	
	B	-	mm	7.45 ± 0.25	
	C	-	mm	4.8 ± 0.20	
	D	-	mm	5.45 ± 0.25	
	E	-	mm	11.70 min	
	F	-	mm	4.0 ± 0.3	
Appx. Weight/Set	Weight	W	gm	3.4	
Test Conditions	Frequency	f	kHz	1	**AL Value in nH**
	Voltage	V	mV	300	1000nH +30/-20% (800 ~1300)
	No of Turns	N	Numbers	100	
	Measuring Temperature	T	°C	25 ± 3	

Material Characteristics:

Base Metal	MnZn		Measuring Condition			Material Grade	SFP4
Parameter	**Symbol**	**Unit**	**Frequency**	**Flux Density**	**Temp.**	**Values**	
Initial Permeability	µi		≤10kHz	0.25mT	25°C	2300 ± 25%	
Power Loss	Pv	KW/m^3	100kHz	200mT	25°C	650	
					100°C	410	
Saturation Flux Density	Bs	mT	10kHz	H=1194A/m	25°C	510	
					100°C	390	
Remanence	Br	mT	10kHz	H=1194A/m	25°C	100	
					100°C	55	
Coercivity	Hc	A/m	10kHz	H=1194A/m	25°C	14	
Curie Temperature	Tc	°C	-	-	-	220	
Resistivity	ρ	Ω	-	-	-	6.5	
Density	d	g/cm^3	-	-	-	4.8	

Inspection Criteria: IEC 60424, Guide on the limits of Surface Irregularities
Mechanical Strength: IEC 61631 Compliant
Compliant: RoHS & REACh

Note: Material characteristics are typical for a toroid core. Product specification will differ from these data due to the influence of geometry and size.
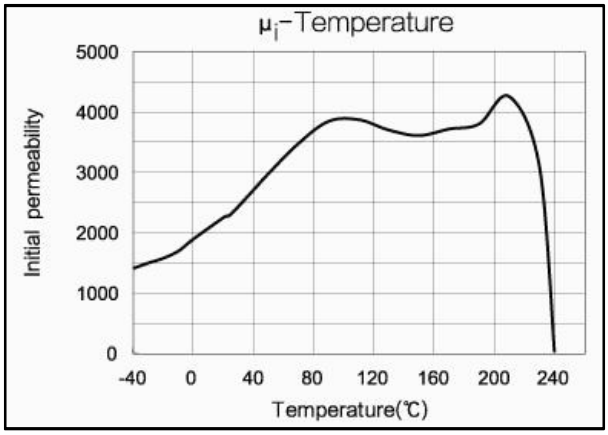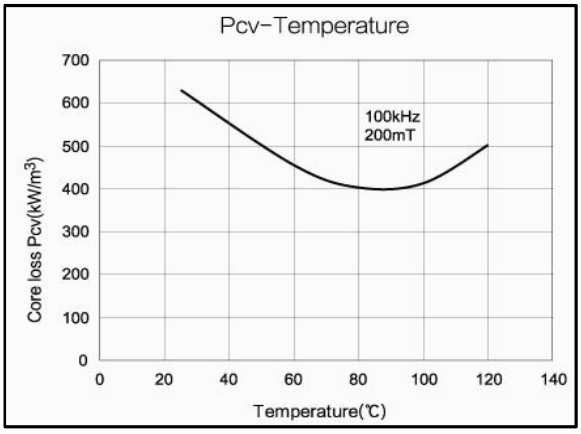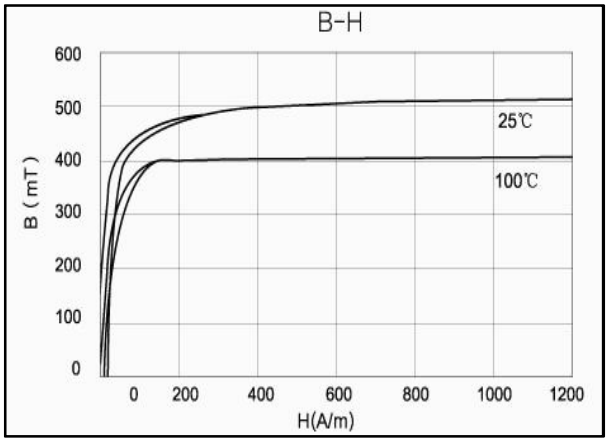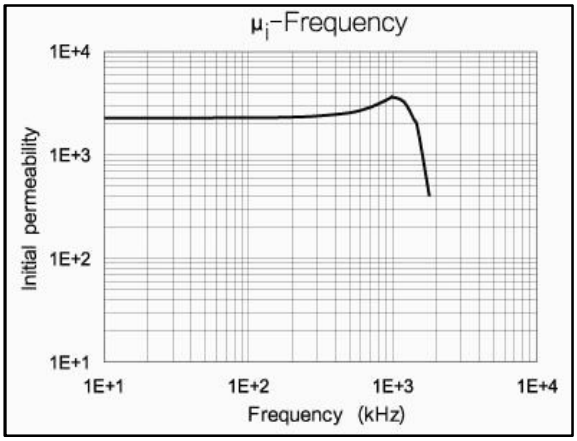
Graphical Input: